GT755HWH

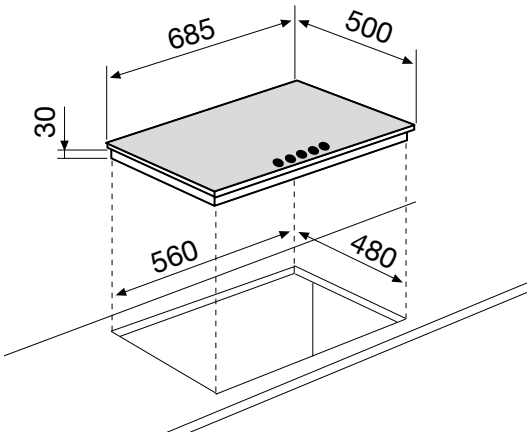

Standard cut-out size