GAS HOBS
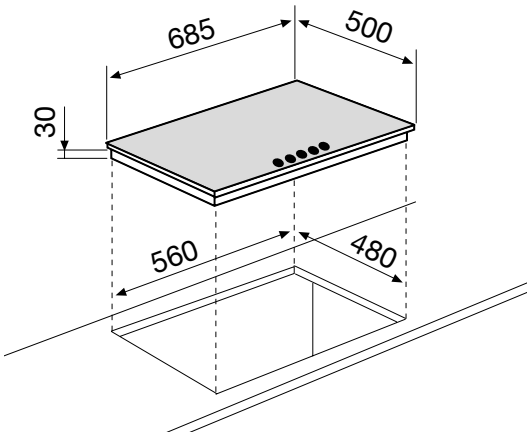
GT755IX