GAS HOBS
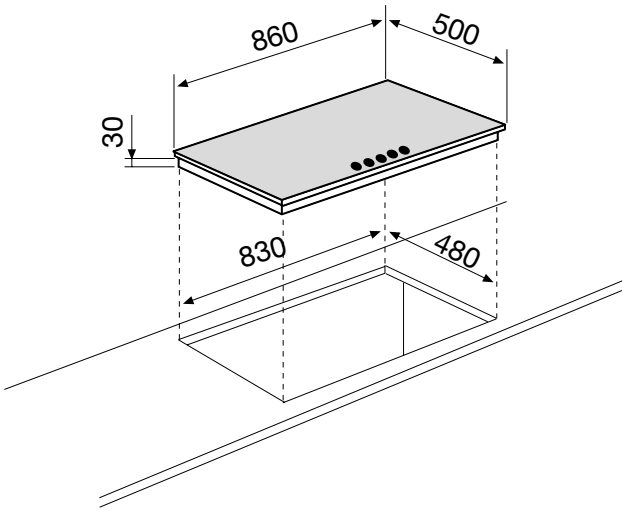
GT955BK