GAS HOBS
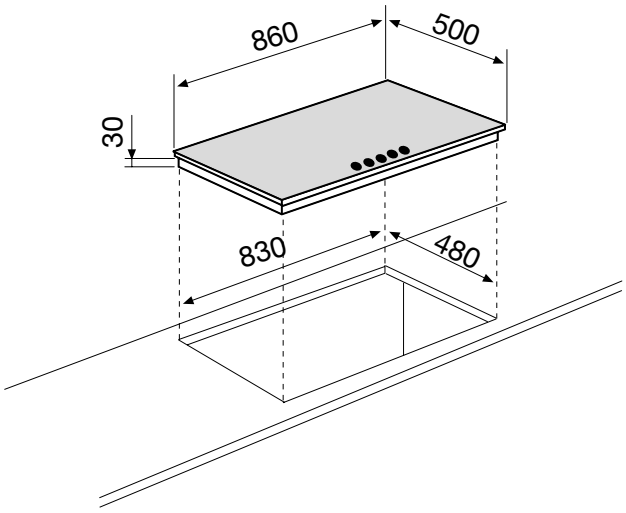
GT955HWH