GAS HOB
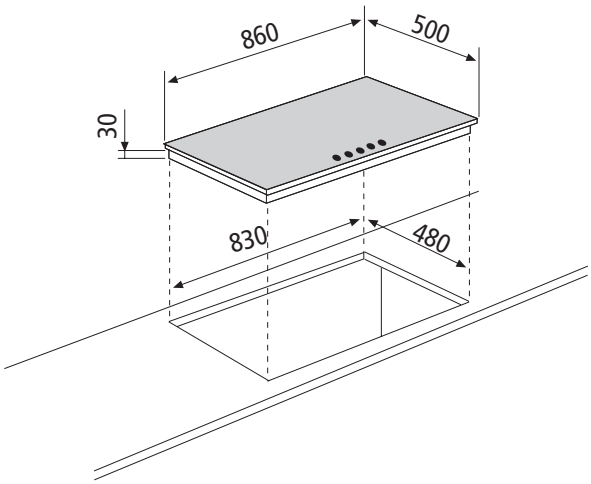
GT955WH