GAS HOBS
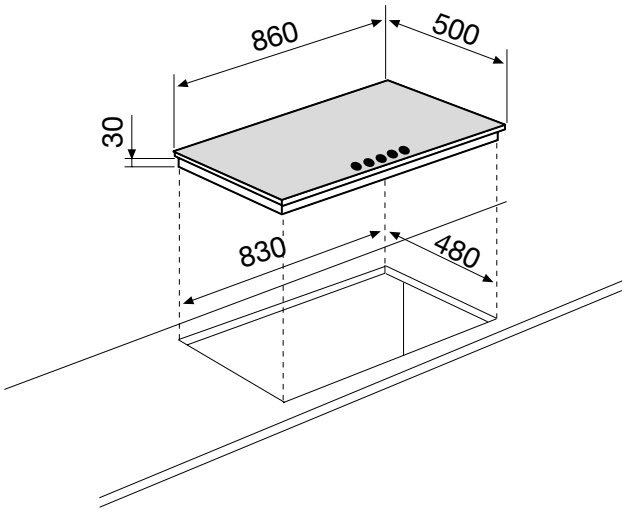
GT955WH