CERAMIC HOB
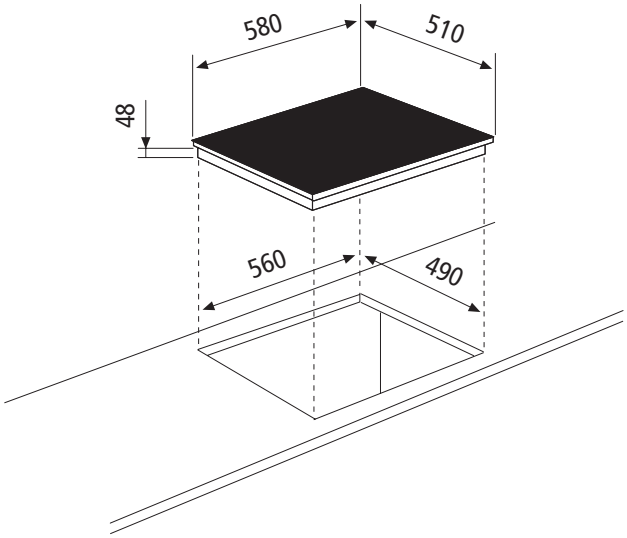
GTH63TBN