CERAMIC HOB
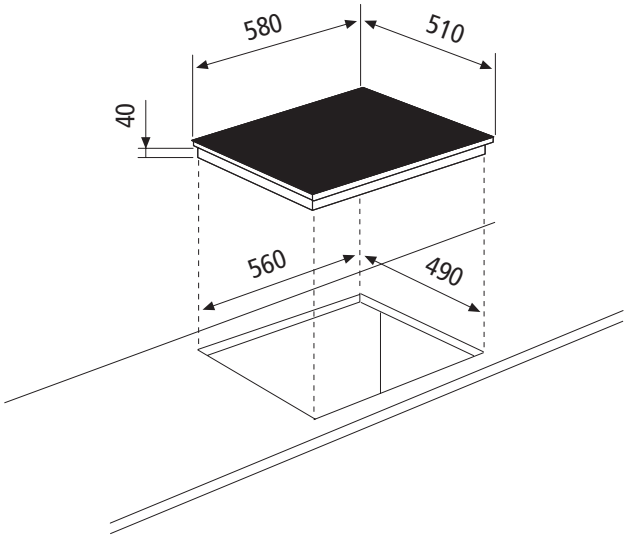
GTH64TFN