CERAMIC HOB
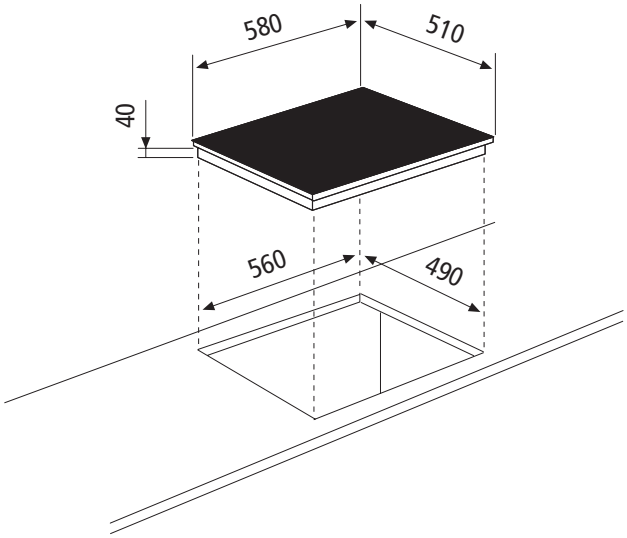
GTH64TIX