CERAMIC HOB
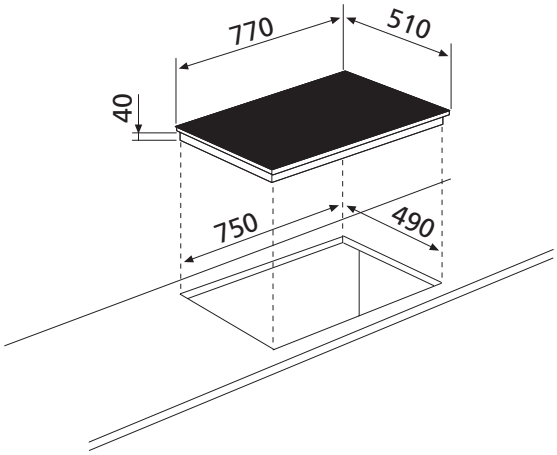
GTH75TCN