DOMINO HOB
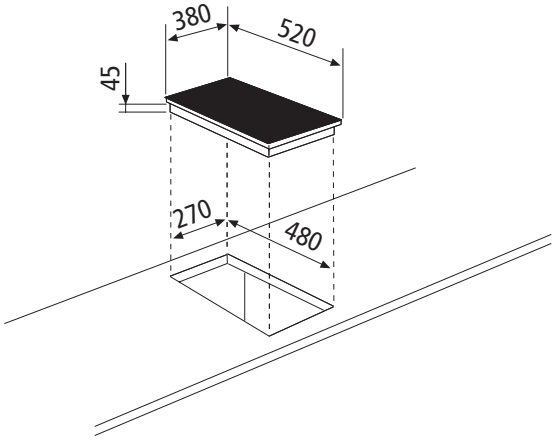
GTHP42BK