GAS HOBS
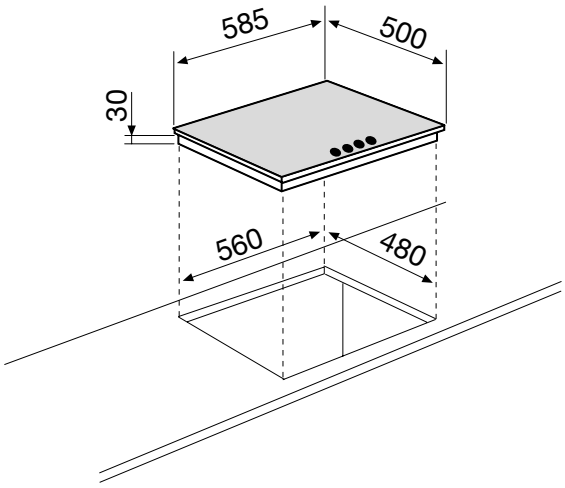
GTL640IX