## GAS HOB

**GTL647NWH**

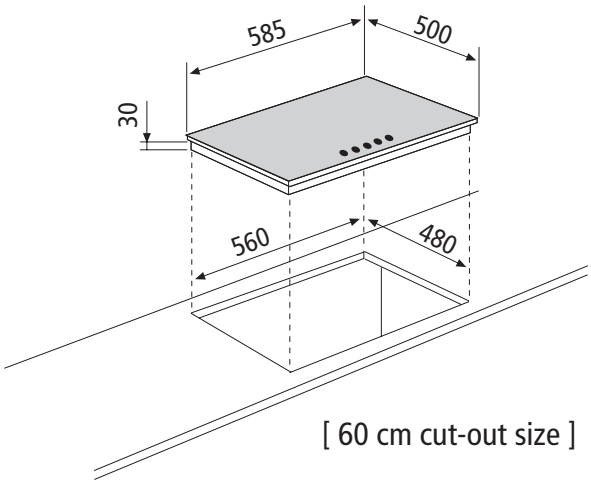


[ 60 cm cut-out size ]