GAS HOB

GTL64BK

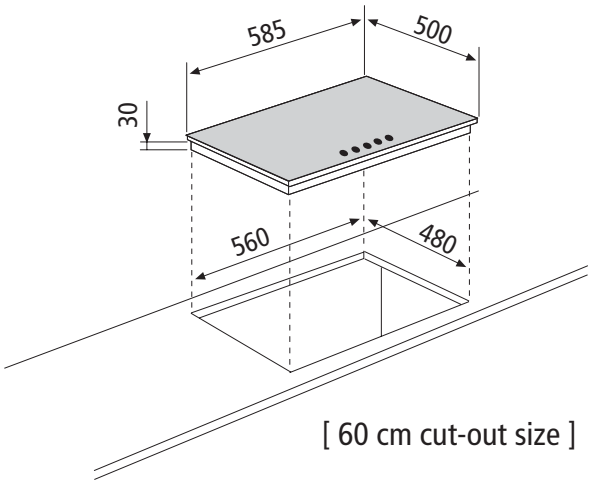

[60 cm cut-out size]