GAS HOBS
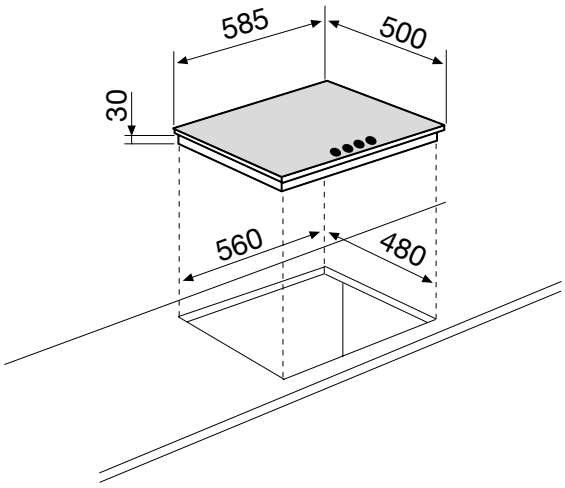
GTL64IX