GAS HOB

GTL64IX

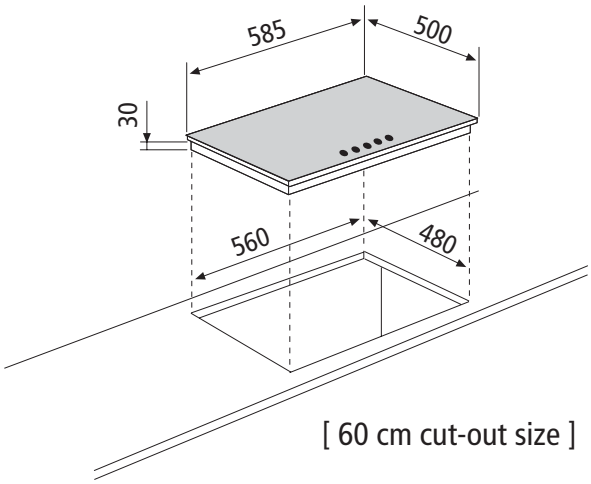

[60 cm cut-out size]