GAS HOBS
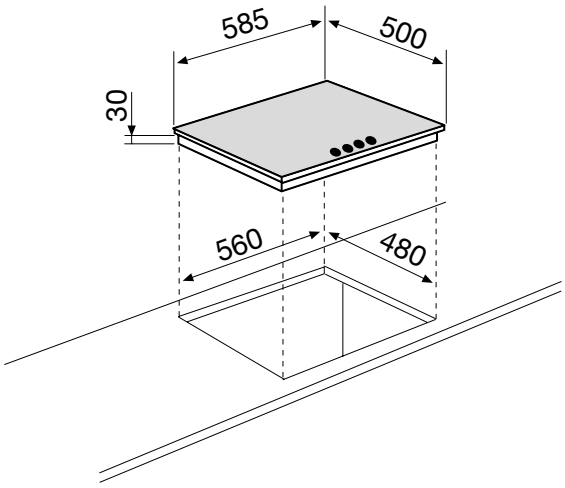
GTL64WH