GAS HOB

GTL64WH

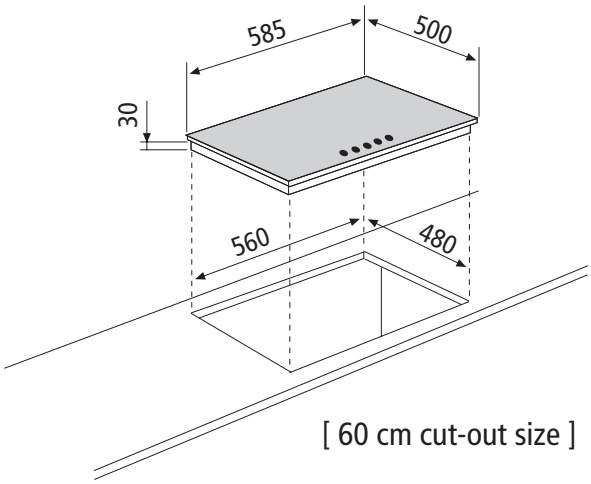

[60 cm cut-out size]