GAS HOB
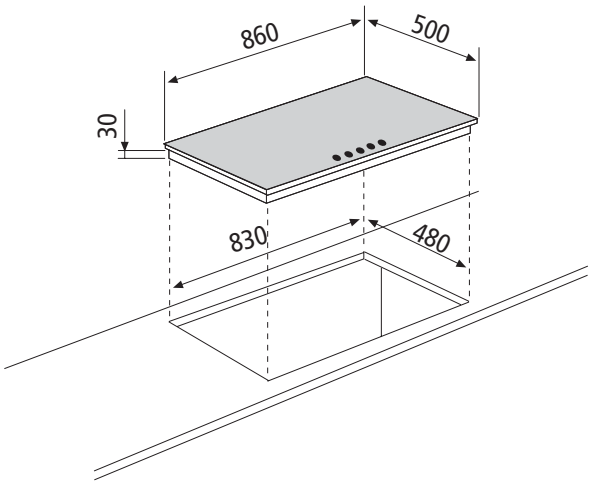
GTL955BK