GAS HOBS
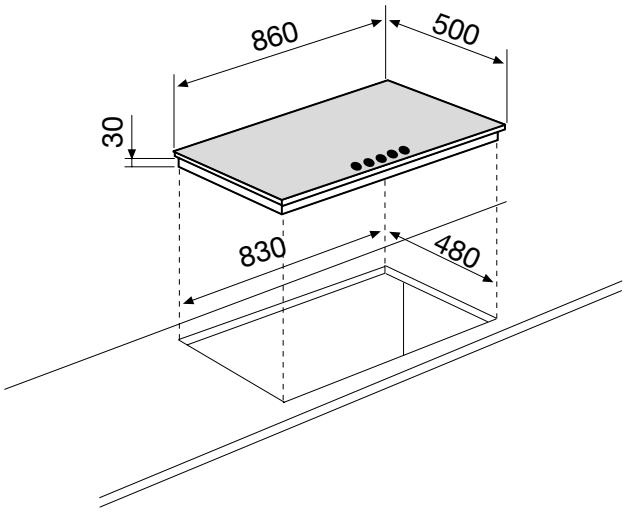
GTL955BK