GAS HOBS
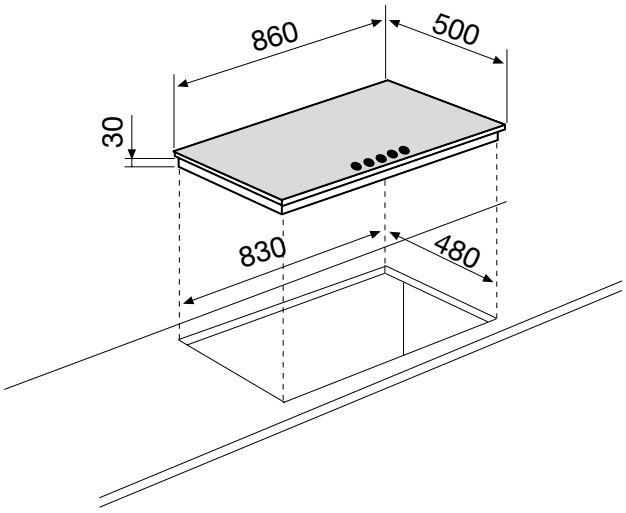
GTL955WH