GAS HOB
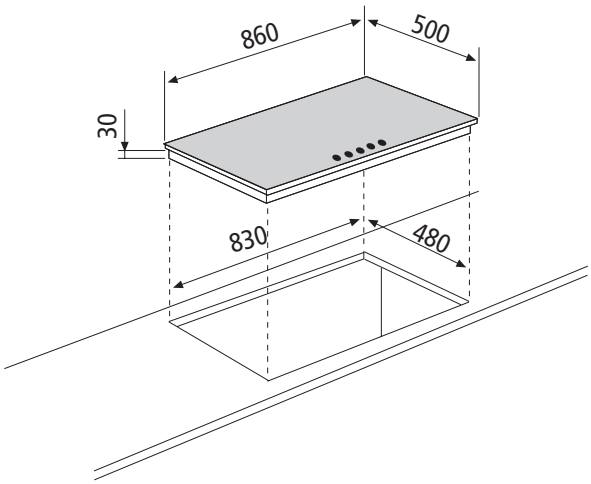
GTL968IX