GAS HOBS
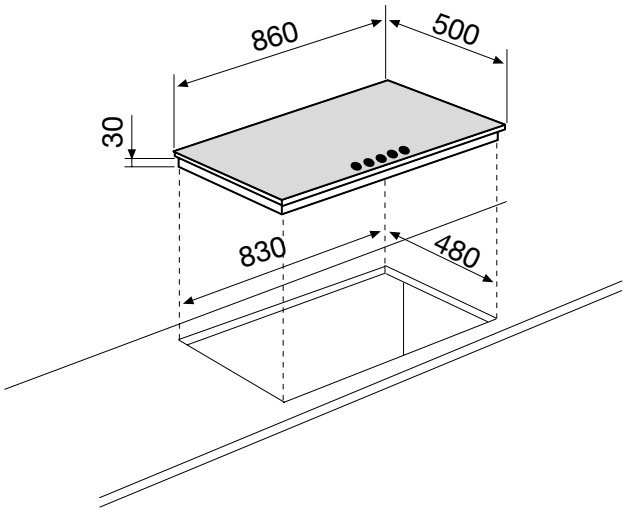
GTL968IX