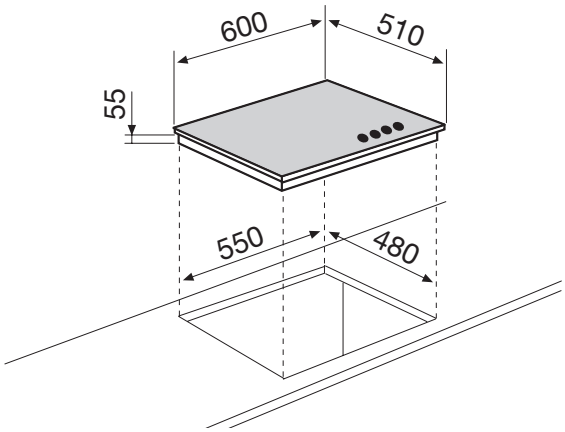GV64BK