CRYSTAL GAS HOB
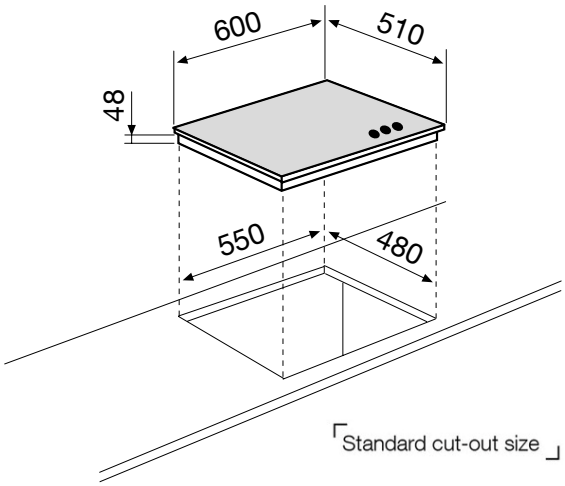
GV64HBK