CRYSTAL GAS HOB
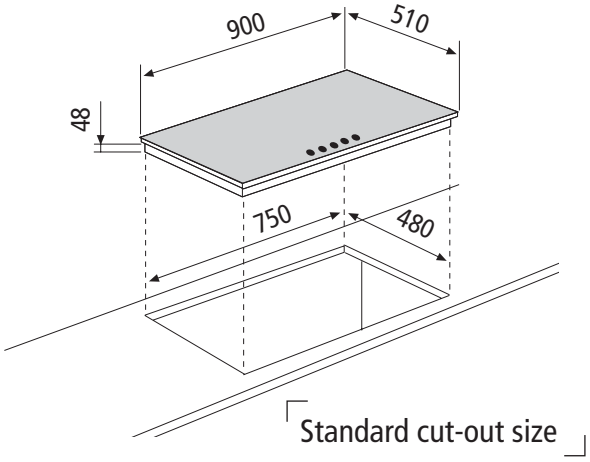
GV955HBK