FORNI
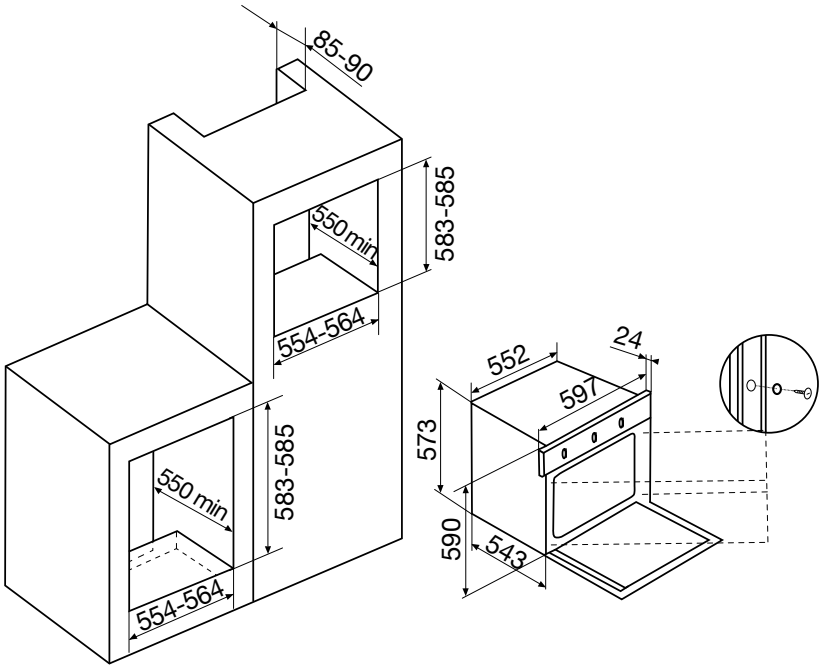
GFP93WH-S6