GLEM Made in Italy.

FC64GWI 60cm 4 Burner Gas Cooktop

2 YEAR WARRANTY

MULTITASK BURNERS

High powered triple ring wok burner down to a low power small burner for simmer cooking.

ERGONOMIC BURNER LAYOUT

The offset burner layout allows for other burners to be used even when stir frying with a wok. In this way the maximum cooking wide is utilisaed.

FLAME FAILURE SAFETY CUT OUT

If for any reason the flame is extinguished the gas shuts off within 3 seconds.

CAST IRON TRIVETS

Heavy duty long lasting cast iron trivets that will last the life time of the cooktop.

ELECTRONIC IGNITION

Reliable fast electronic ignition controlled through the burner control knobs.

TECHNICAL FEATURES

MAIN FEATURES	
Cooktop features	Ergonomic burner layout
	Single piece easy clean hob
Left front wok burner	14.6Mj/h (NG); 13.8 (LPG)
Left rear simmer burner	4.0Mj/h (NG); 3.8 Mj/h (LPG)
Right front medium burner	6.1Mj/h (NG); 6.9 Mj/h (LPG)
Right rear medium burner	6.1Mj/h (NG); 6.9 Mj/h (LPG)
Total max gas consumption	30.8 (NG);31.4 (LPG)
Flame failure protection	YES
Cast iron trivets	YES x 2
Electrical Connection	1.2 m cable with 10amp plug
Voltage	220-240V 50Hz
DESIGN	
Colour	Stainless Steel
Single piece hob	YES
Italian SABAF burners	YES
Ignition using the control knob	YES
LPG Conversion kit	YES
ACCESSORIES	
Instruction manual	YES
SAFETY	
Gas shut off valves if flame fails	YES
DIMENSIONS	
Product mm (WxDxH)	595 x 500 x 40
Cut out mm (WxD)	560 x 480
Carton size mm (WxDxH)	650 x 560 x 135
Cooktop weight	9 Kg
Package weight	10 Kg
WARRANTY	
2 Years Parts and Labour	In home service

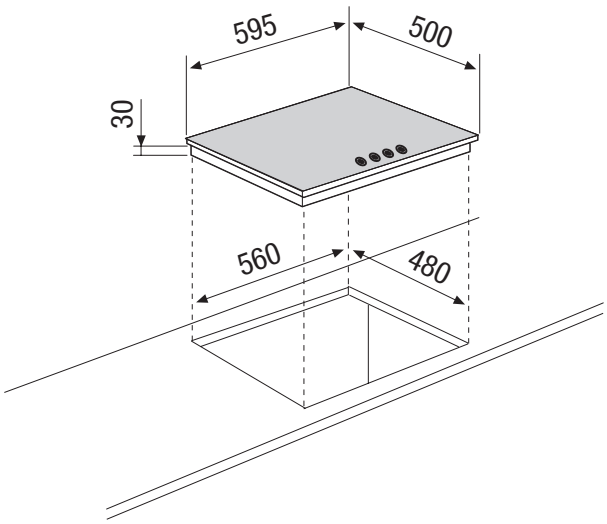

Please note:
Every effort has been made to ensure this information is correct. However, due to product improvement Glem reserves the right to make changes to products without prior notice.

Glem Gas Australasia Pty. Ltd.
www.glemgas.com.au