LAVELLI
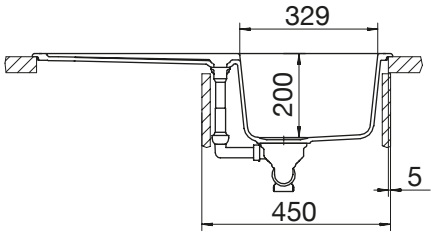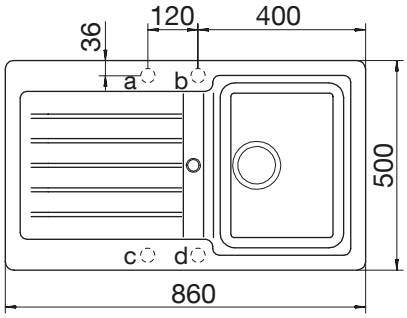
LS1G86S