FC64GWI
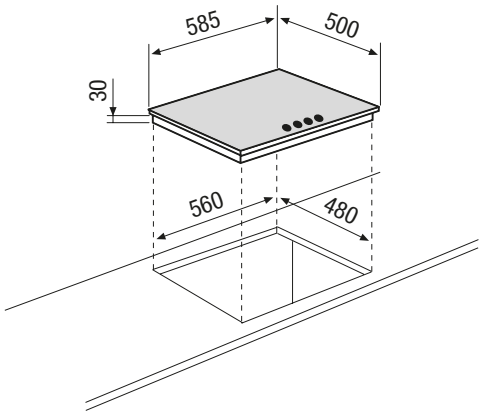
HOBS