ELECTRIC HOB
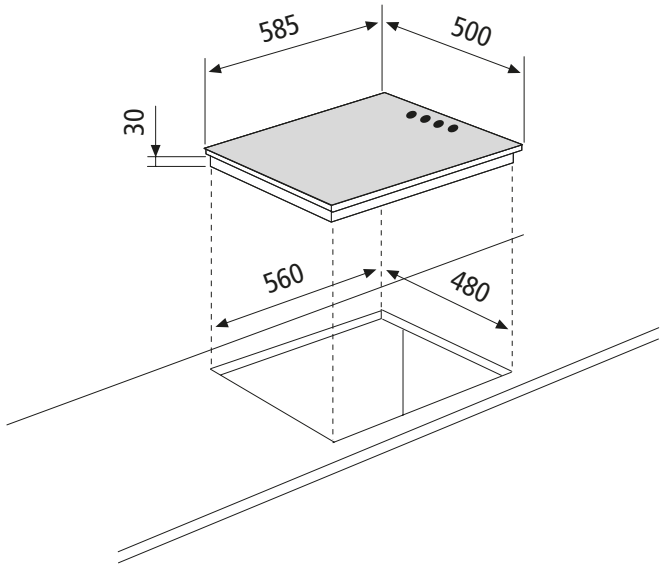
GTL640IX