CAPPA
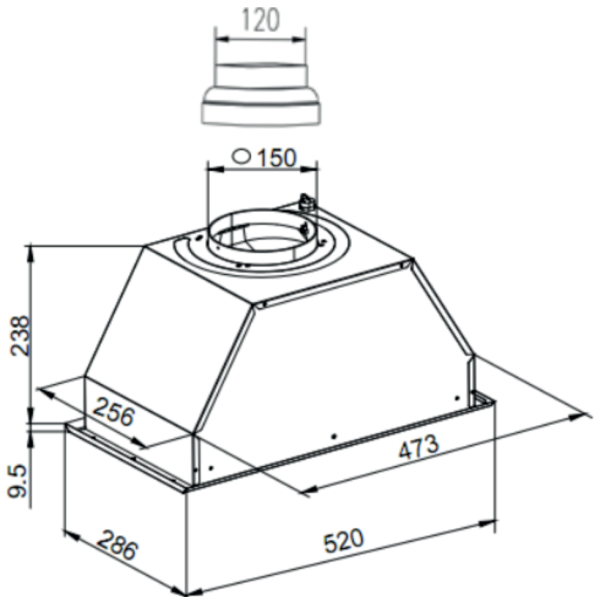
GHF545IX