## FORNO 90 CM
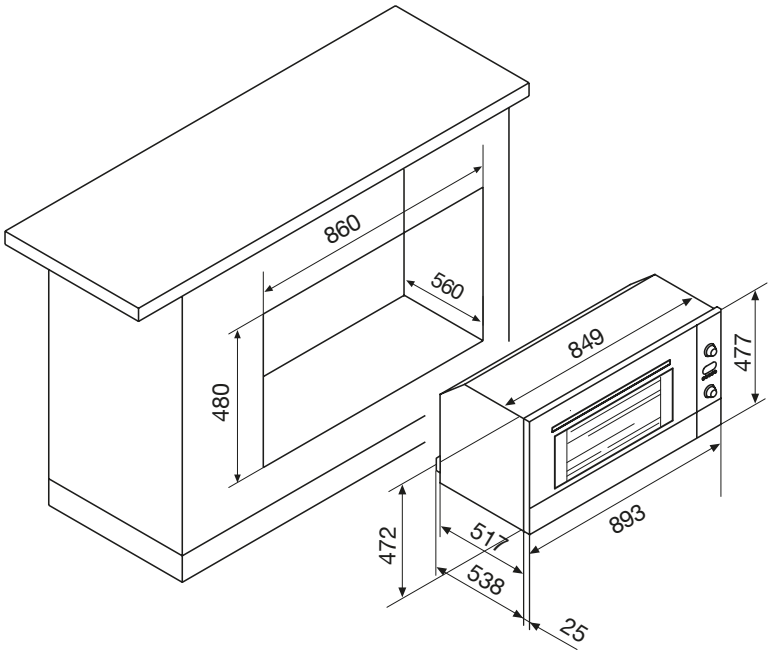
**GFE993IX**