CAPPA
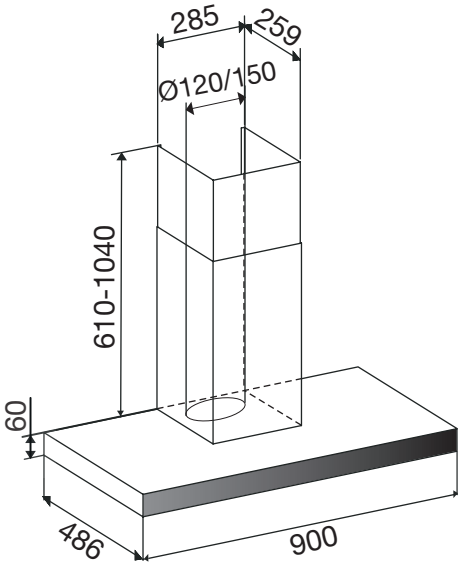
GHB990IXA